power board (adapter + inverter)

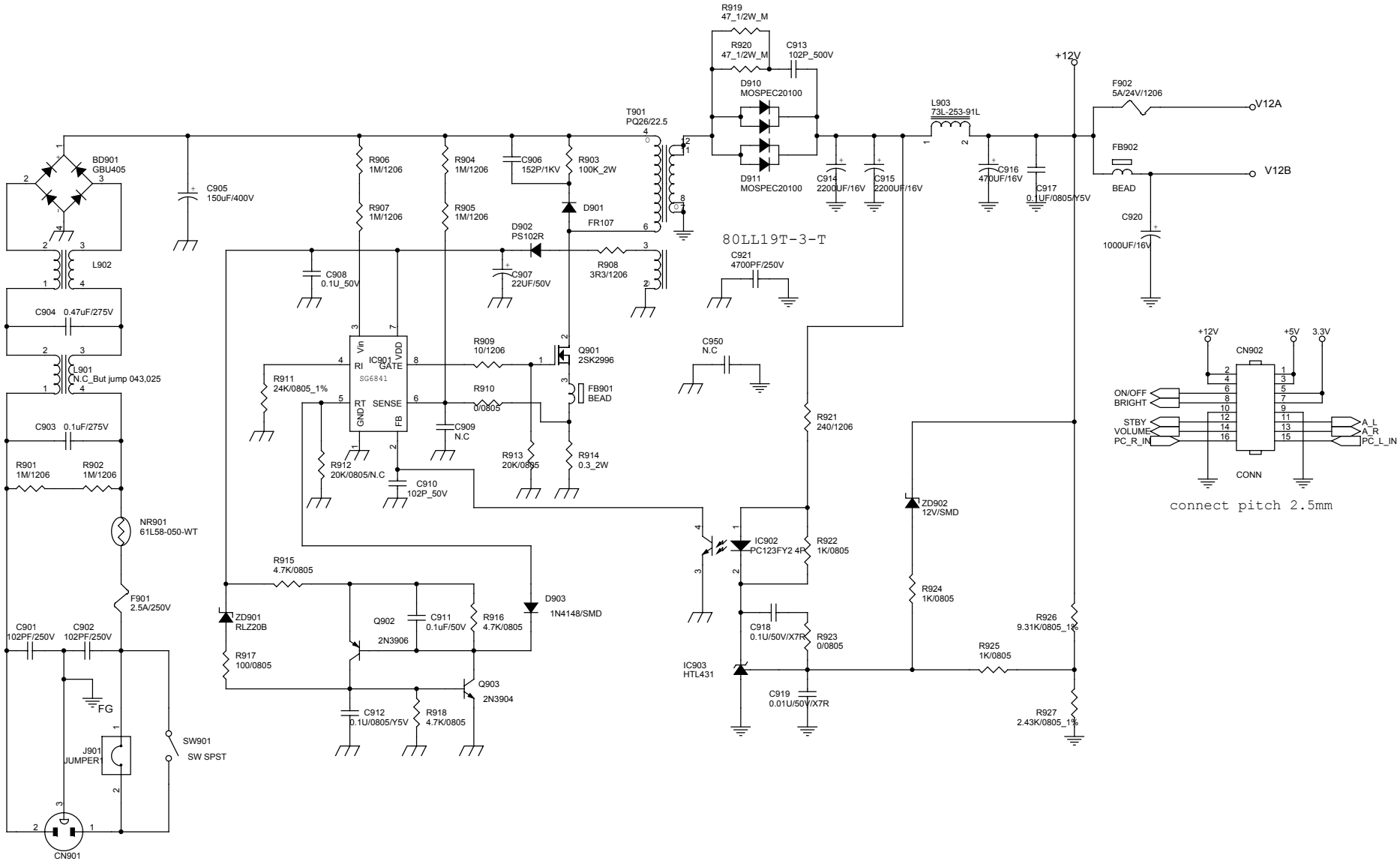

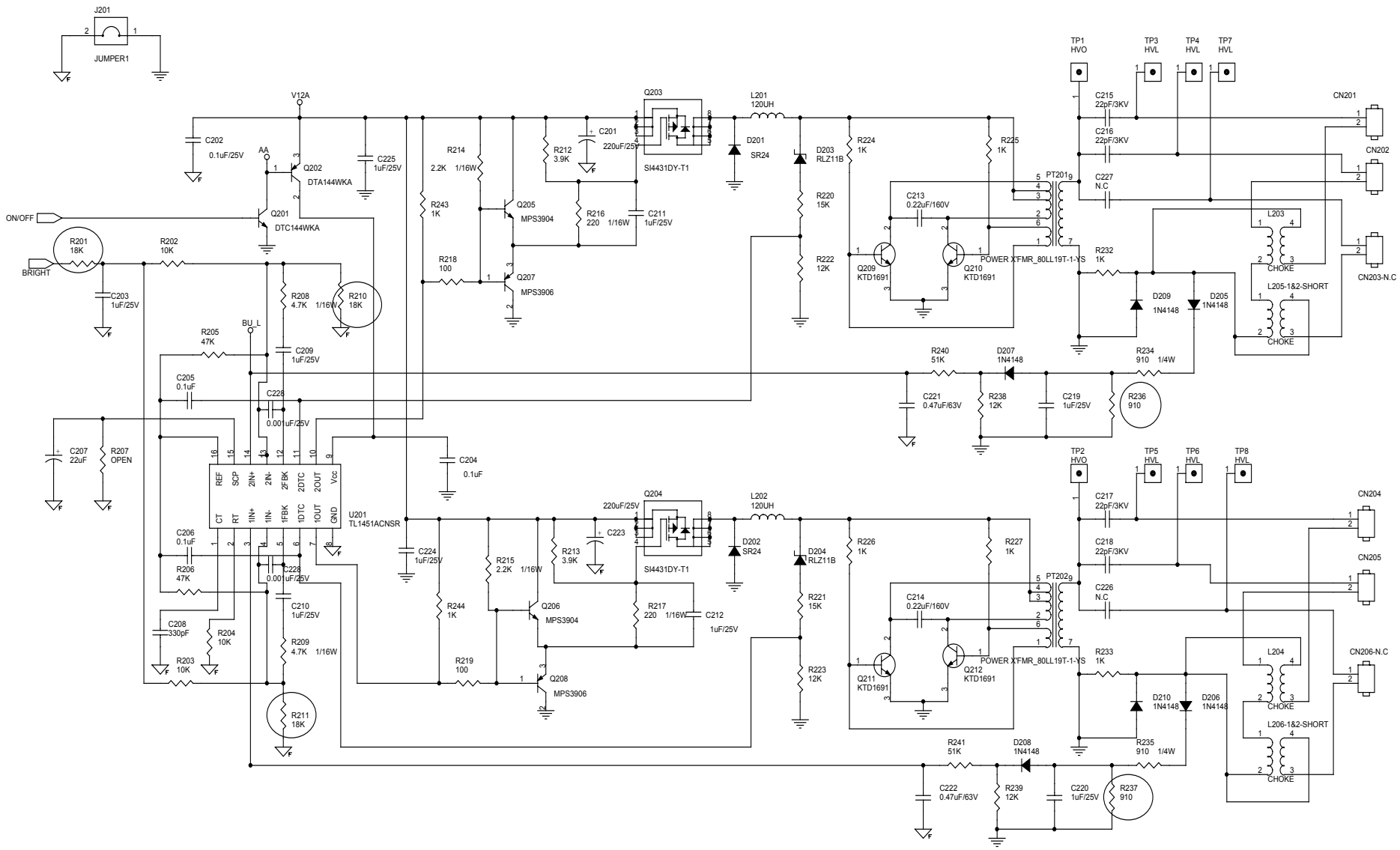
J201
JUMPER1
V12A
C202
0.1uF/25V
AA
Q202
DTA144WKA
Q201
DTC144WKA
ON/OFF
BRIGHT
R201
18K
R202
10K
C203
1uF/25V
R208
4.7K 1/16W
R210
18K
BU_L
R205
47K
C209
1uF/25V
C205
0.1uF
C228
0.001uF/25V
C207
22uF
R207
OPEN
U201
TL1451ACNSR
REF
SCP
2IN+
2IN-
2FBK
2DTC
2OUT
Vcc
CT
RT
1IN+
1IN-
1FBK
1DTC
1OUT
GND
C206
0.1uF
R206
47K
C208
330pF
R204
10K
R203
10K
C210
1uF/25V
R209
4.7K 1/16W
R211
18K
C204
0.1uF
C225
1uF/25V
R214
2.2K 1/16W
R243
1K
R218
100
Q205
MPS3904
Q207
MPS3906
R212
3.9K
C201
220uF/25V
R216
220 1/16W
C211
1uF/25V
Q203
SI4431DY-T1
L201
120UH
D201
SR24
D203
RLZ11B
R220
15K
R222
12K
R224
1K
R225
1K
C213
0.22uF/160V
Q209
KTD1691
Q210
KTD1691
PT201
POWER XFMR_80LL19T-1-YS
R232
1K
D209
1N4148
D205
1N4148
R240
51K
D207
1N4148
R234
910 1/4W
C221
0.47uF/63V
R238
12K
C219
1uF/25V
R236
910
TP1
HVO
TP3
HVL
TP4
HVL
TP7
HVL
C215
22pF/3KV
C216
22pF/3KV
C227
N.C
CN201
CN202
CN203-N.C
L203
CHOKE
L205-1&2-SHORT
CHOKE
C224
1uF/25V
R215
2.2K 1/16W
R244
1K
R219
100
Q206
MPS3904
Q208
MPS3906
R213
3.9K
C223
220uF/25V
R217
220 1/16W
C212
1uF/25V
Q204
SI4431DY-T1
L202
120UH
D202
SR24
D204
RLZ11B
R221
15K
R223
12K
R226
1K
R227
1K
C214
0.22uF/160V
Q211
KTD1691
Q212
KTD1691
PT202
POWER XFMR_80LL19T-1-YS
R233
1K
D210
1N4148
D206
1N4148
R241
51K
D208
1N4148
R235
910 1/4W
C222
0.47uF/63V
R239
12K
C220
1uF/25V
R237
910
TP2
HVO
TP5
HVL
TP6
HVL
TP8
HVL
C217
22pF/3KV
C218
22pF/3KV
C226
N.C
CN204
CN205
CN206-N.C
L204
CHOKE
L206-1&2-SHORT
CHOKE